Compact IP20 multiprotocol Ethernet I/O module
16 universal digital channels
FEN20-16DXP

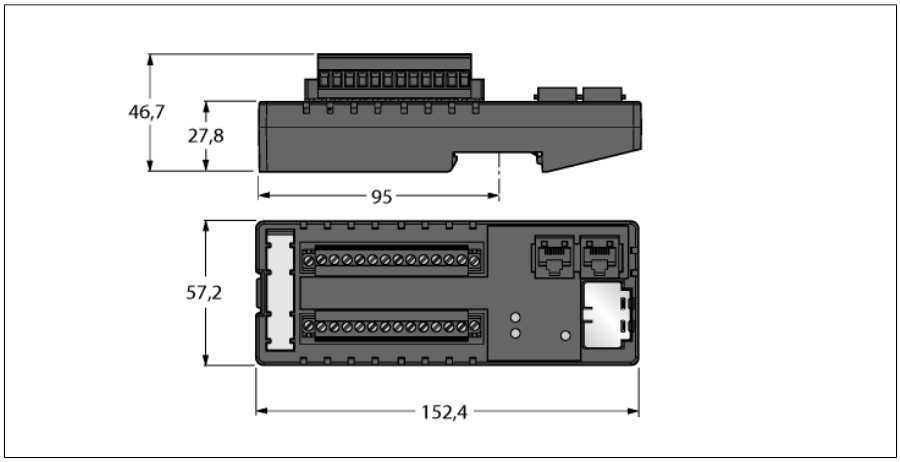

- FLC/ARGEE programmable
- EtherNet/IP slave
- Modbus TCP slave
- PROFINET slave
- 2 RJ45 ports for the Ethernet connection
- Integrated Ethernet switch
- 10/100 Mbps
- DIN rail mount housing
- 16 universal digital channels, DI / DO
- 24 VDC, PNP
- Output current: 1.0 A
- Protection class IP20

Type	FEN20-16DXP
ID	6931089

Number of channels	16
Operating / load voltage	12…30 VDC
Operating current	100 mA
Electrical isolation	500 V between the I/O groups and to Ethernet
Supply voltage	24 VDC
System power supply	Supply from V1
Admissible range	12…30
Power dissipation, typical	≤ 2.4 W
Voltage supply connection	Screw terminals

Inputs	
Number of channels	16
Input voltage	24 VDC
Supply current	700 mA
Switching threshold	10 V / 2 mA
Low-level signal voltage	< 9 VDC
High level signal voltage	11…30 VDC
Low level signal current	< 1.5 mA
High level signal current	> 2,5 mA
Input delay	2.5 ms
Max. input current	6 mA

Outputs	
Number of channels	16
Type of output diagnostics	Channel diagnostics
Output voltage	12…30 VDC
Output current per channel	at 70 °C: 0.5 A (8 A in total) or 0.75 A (6 A in total); at 50 °C: 0.75 A (12 A in total) or 1 A (8 A in total)
Load type	resistive, inductive, lamp load
Short-circuit protection	yes

Edition • 2024-10-02T20:01:51+02:00

System data	
Transmission rate Ethernet	10/100 Mbps, full/half duplex, autonegotiation, autocrossing
Transmission rate	10/100 Mbps; Full/Half Duplex; Auto Negotiation; Auto Crossing
Fieldbus address range	0 (192.168.1.254)
Addressing modes Ethernet:	via coded rotary switches
Connection technology Ethernet	2 × RJ45 female connector
Protocol detection	automatic
Web server	192.168.1.254 (default)
Service interface	Ethernet
Device Reset	via Rotary Switch

Modbus TCP	
Addressing	Static IP, BOOTP, DHCP
Supported function codes	FC1, FC2, FC3, FC4, FC5, FC6, FC15, FC16, FC23
Number of TCP connections	6
Input Data Size	max. 1 register
Input register start address	0 (0x0000 hex)
Output Data Size	max. 1 register
Output register start address	2048 (0x0800 hex)

Ethernet/IP	
Addressing	acc. to EtherNet/IP specification
Quick Connect (QC)	< 150 ms
Device Level Ring (DLR)	supported
Class 1 connections (CIP)	6

PROFINET	
Addressing	DCP
Conformance class	B (RT)
MinCycleTime	1 ms
Fast Start-Up (FSU)	< 150 ms
Diagnostics	acc. to PROFINET alarm handling
Topology detection	supported
Automatic addressing	supported
Media Redundancy Protocol (MRP)	supported

Dimensions (W x L x H)	57.1 x 152.2 x 46.7 mm
Housing material	glass fiber reinforced polyamide (PA6-GF30)
Ambient temperature	-40…+70 °C
Storage temperature	-40…+85 °C
Protection class	IP20
MTTF	148 years acc. to SN 29500 (Ed. 99) 20 °C
Approvals	CE, UL, Class I Div. 2

Edition • 2024-10-02T20:01:51+02:00

Terminal assignment

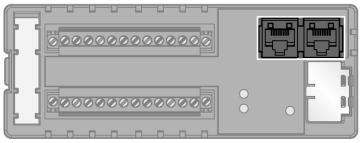	**Ethernet**	RJ45 Ethernet 1 = TX + 2 = TX – 3 = RX + 4 = n.c. 5 = n.c. 6 = RX – 7 = n.c. 8 = n.c.
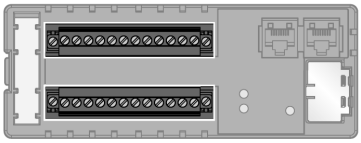	**Power Supply and I/O Channels** The internal module electronics and the I/O channels 0 to 7 are supplied via V1. The I/O channels 8 to 13 are supplied via V2. The I/O channels 14 to 15 are supplied via V3. More devices can be supplied with 24 VDC, up to 0.7 A, via the terminals Vout1+ and Vout1-.	Terminal Connection 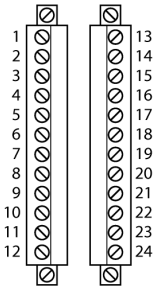 1 = $V_{OUT}1$ + 13 = V2 + 2 = $V_{OUT}1$ – 14 = V2 – 3 = V1 + 15 = I/O 8 4 = V1 – 16 = I/O 9 5 = I/O 0 17 = I/O 10 6 = I/O 1 18 = I/O 11 7 = I/O 2 19 = I/O 12 8 = I/O 3 20 = I/O 13 9 = I/O 4 21 = V3 + 10 = I/O 5 22 = V3 – 11 = I/O 6 23 = I/O 14 12 = I/O 7 24 = I/O 15

Edition • 2024-10-02T20:01:51+02:00

Module LED Status

LED	Color	Status	Description
ETH1 / ETH2	Green	ON	Ethernet Link (100 Mbps)
		Flashing	Ethernet communication (100 Mbps)
	yellow	ON	Ethernet Link (10 Mbps)
		Flashing	Ethernet communication (10 Mbps)
		OFF	No Ethernet link
BUS	Green	ON	Active connection to a master
		Flashing	Ready
	Red	ON	IP address conflict or status word is active
		Flashing	Blink/Wink command active
		OFF	Power off
ERR	Green	ON	Diagnostics disabled
	Red	ON	Short-circuit
I/O 0 – I/O 15	Green	ON	Input/Output: Active
		OFF	Input/Output: Inactive

Prozessdaten Mapping

Modbus TCP Register-Mapping

	Reg	Bit 15	Bit 14	Bit 13	Bit 12	Bit 11	Bit 10	Bit 9	Bit 8	Bit 7	Bit 6	Bit 5	Bit 4	Bit 3	Bit 2	Bit 1	Bit 0
Eingänge (RO)	0x0000	DI15	DI14	DI13	DI12	DI11	DI10	DI9	DI8	DI7	DI6	DI5	DI4	DI3	DI2	DI1	DI0
Status (RO)	0x0001	-	FCE	-	-	CFG	COM	V1 low	-	-	-	-	-	-	-	-	Diag Warn
Diag (RO)	0x0002	-	-	-	-	-	-	-	-	-	-	-	-	-	-	-	I/O Diag
Ausgänge (RW)	0x0800	DO15	DO14	DO13	DO12	DO11	DO10	DO9	DO8	DO7	DO6	DO5	DO4	DO3	DO2	DO1	DO0
I/O Diag (RO)	0xA000	SCO7	SCO6	SCO5	SCO4	SCO3	SCO2	SCO1	SCO0	-	-	-	-	-	-	-	IGS
I/O Diag (RO)	0xA001	-	-	-	-	-	-	-	-	SCO15	SCO14	SCO13	SCO12	SCO11	SCO10	SCO9	SCO8

EtherNet/IP™ Data Mapping

INPUT	**Word**	**Bit 15**	**Bit 14**	**Bit 13**	**Bit 12**	**Bit 11**	**Bit 10**	**Bit 9**	**Bit 8**	**Bit 7**	**Bit 6**	**Bit 5**	**Bit 4**	**Bit 3**	**Bit 2**	**Bit 1**	**Bit 0**
	0	-	FCE	-	-	CFG	COM	V1 low	-	-	-	-	-	-	-	-	Diag Warn
	1	DI15	DI14	DI13	DI12	DI11	DI10	DI9	DI8	DI7	DI6	DI5	DI4	DI3	DI2	DI1	DI0
	2	-	-	Sched Diag	-	-	-	-	-	-	-	-	-	-	-	-	I/O Diag
	3	SCO7	SCO6	SCO5	SCO4	SCO3	SCO2	SCO1	SCO0	-	-	-	-	-	-	-	IGS
	4	-	-	-	-	-	-	-	-	SCO15	SCO14	SCO13	SCO12	SCO11	SCO10	SCO9	SCO8
OUTPUT	**Word**	**Bit 15**	**Bit 14**	**Bit 13**	**Bit 12**	**Bit 11**	**Bit 10**	**Bit 9**	**Bit 8**	**Bit 7**	**Bit 6**	**Bit 5**	**Bit 4**	**Bit 3**	**Bit 2**	**Bit 1**	**Bit 0**
	0	-	-	-	-	-	-	-	-	-	-	-	-	-	-	-	-
	1	DO15	DO14	DO13	DO12	DO11	DO10	DO9	DO8	DO7	DO6	DO5	DO4	DO3	DO2	DO1	DO0

PROFINET Prozessdaten

	Byte	Bit 7	Bit 6	Bit 5	Bit 4	Bit3	Bit 2	Bit 1	Bit 0
Eingänge	0	DI7	DI6	DI5	DI4	DI3	DI2	DI1	DI0
	1	DI15	DI14	DI13	DI12	DI11	DI10	DI9	DI8
Ausgänge	0	DO7	DO6	DO5	DO4	DO3	DO2	DO1	DO0
	1	DO15	DO14	DO13	DO12	DO11	DO10	DO9	DO8

Legende:

DIx	Digitaler Eingang x	COM	Kommunikation auf internem Modulbus gestört
DOx	Digitaler Ausgang x	CFG	I/O-Konfigurationsfehler
IGS	Eingangsgruppe - Kurzschluss	FCE	I/O-ASSISTANT Force Mode aktiv
SCOx	Kurzschluss Ausgang x	I/O Diag	I/O-Diagnose erkannt
Diag Warn	Diagnose an mind. 1 Kanal	Sched Diag	Herstellerspezifische Diagnose konfiguriert und aktiv
V1 low	Unterspannung V1	-	-

Edition • 2024-10-02T20:01:51+02:00